P1V-M is a series of air motors, with planetary gearbox and motor made of black varnished steel. Its robustness makes it suitable for all normal air motor applications.

The range contains three different sizes with power ratings of 200, 400 or 600 Watts, shaft speeds ranging from 29 rpm to 10000 rpm, and torques up to 401 Nm at maximum power (more than 800 Nm torque if the motor is braked to stationary).

The standard range includes a total of 27 versions, covering all possible requirements for these power ratings.

- Power 0,2 kW, 0,4 kW and 0,6 kW
- Patented method for simple change of vanes
- Free speeds from 28 up to 10000 rpm
- Torque from 0,38 Nm up to 380NM by max output power
- Standard equipped with flange mounting
- Foot mountings as accesories

Note: All air motors can be operated oil-free without special adaptation with only a 20% reduction of power.

Operating information

Working pressure	Max 7 bar
Working temperature	-30 °C to +100 °C
Medium	Filtered dry air and oil mist, purity class ISO 8573-1 class 3.-.5 for indoor use and with a dew point lower than ambient temperature for outdoor use.

P1V-M020A, 200 watt motor with flange

Max power kW	Free speed r/Min	Speed at max power r/Min	Torque at max power Nm	Min start torque Nm	Air consumption at max power l/s	Conn.	Min pipe ID mm	Weight Kg	Order code
0,200	10 000	5 000	0,38	0,57	6,5	G1/8	10	1,94	**P1V-M020A0A00**
0,200	2 890	1 445	1,31	1,97	6,5	G1/8	10	1,94	**P1V-M020A0290**
0,200	1 466	733	2,59	3,89	6,5	G1/8	10	1,94	**P1V-M020A0150**
0,200	810	405	4,69	7,04	6,5	G1/8	10	2,94	**P1V-M020A0081**
0,200	413	206	9,20	13,81	6,5	G1/8	10	2,94	**P1V-M020A0041**
0,200	209	105	18,14	27,21	6,5	G1/8	10	2,94	**P1V-M020A0021**
0,200	90	45	42,34	63,50	6,5	G1/8	10	7,44	**P1V-M020A0009**
0,200	59	29	64,76	97,15	6,5	G1/8	10	7,44	**P1V-M020A0006**
0,200	30	15	126,99	190,48	6,5	G1/8	10	7,44	**P1V-M020A0003**

P1V-M040A, 400 watt motor with flange

Max power kW	Free speed r/Min	Speed at max power r/Min	Torque at max power Nm	Min start torque Nm	Air consumption at max power l/s	Conn.	Min pipe ID mm	Weight Kg	Order code
0,400	10 000	5 000	0,76	1,15	9,5	G3/8	12	2,32	**P1V-M040A0A00**
0,400	2 890	1 445	2,63	3,98	9,5	G3/8	12	2,32	**P1V-M040A0290**
0,400	1 466	733	5,18	7,84	9,5	G3/8	12	2,32	**P1V-M040A0150**
0,400	810	405	9,39	14,20	9,5	G3/8	12	4,32	**P1V-M040A0081**
0,400	413	206	18,41	27,85	9,5	G3/8	12	4,32	**P1V-M040A0041**
0,400	209	105	36,28	54,90	9,5	G3/8	12	4,32	**P1V-M040A0021**
0,400	90	45	84,67	128,12	9,5	G3/8	12	7,82	**P1V-M040A0009**
0,400	59	29	129,53	195,99	9,5	G3/8	12	7,82	**P1V-M040A0006**
0,400	30	15	253,98	384,31	9,5	G3/8	12	7,82	**P1V-M040A0003**

P1V-M060A, 600 watt motor with flange

Max power kW	Free speed r/Min	Speed at max power r/Min	Torque at max power Nm	Min start torque Nm	Air consumption at max power l/s	Conn.	Min pipe ID mm	Weight Kg	Order code
0,600	10 000	5 000	1,14	1,71	15,0	G3/8	12	5,59	**P1V-M060A0A00**
0,600	2 890	1 445	3,94	5,92	15,0	G3/8	12	5,59	**P1V-M060A0290**
0,600	1 466	733	7,77	11,66	15,0	G3/8	12	5,59	**P1V-M060A0150**
0,600	810	405	14,08	21,12	15,0	G3/8	12	6,59	**P1V-M060A0081**
0,600	413	206	27,61	41,42	15,0	G3/8	12	6,59	**P1V-M060A0041**
0,600	209	105	54,42	81,64	15,0	G3/8	12	6,59	**P1V-M060A0021**
0,600	90	45	127,01	190,51	15,0	G3/8	12	11,09	**P1V-M060A0009**
0,600	59	29	194,29	291,44	15,0	G3/8	12	11,09	**P1V-M060A0006**
0,600	30	15	380,97	571,45	15,0	G3/8	12	11,09	**P1V-M060A0003**

Dimensions

Motor P1V-M0●0A0A00
Motor P1V-M0●0A0290
Motor P1V-M0●0A0150
Motor P1V-M0●0A0081

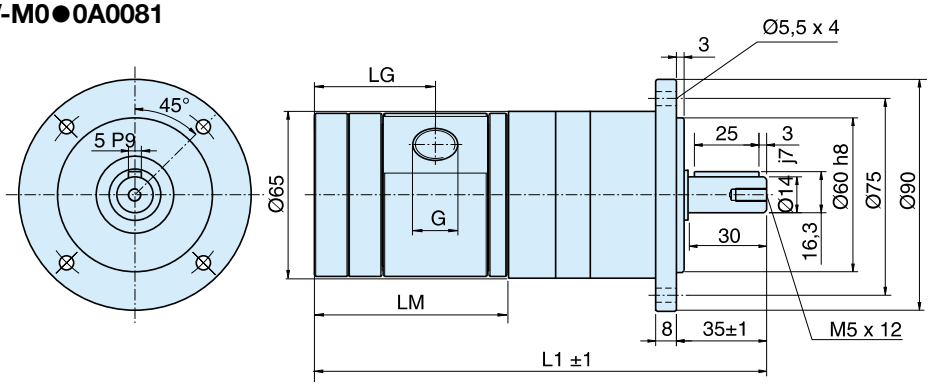

Motor P1V-M0●0A0041
Motor P1V-M0●0A0021
Motor P1V-M0●0A0009

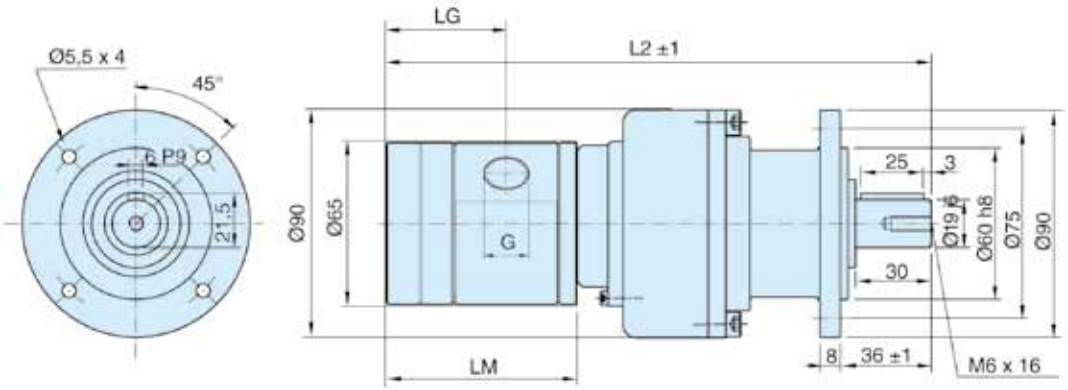

Motor P1V-M0●0A0006
Motor P1V-M0●0A0003

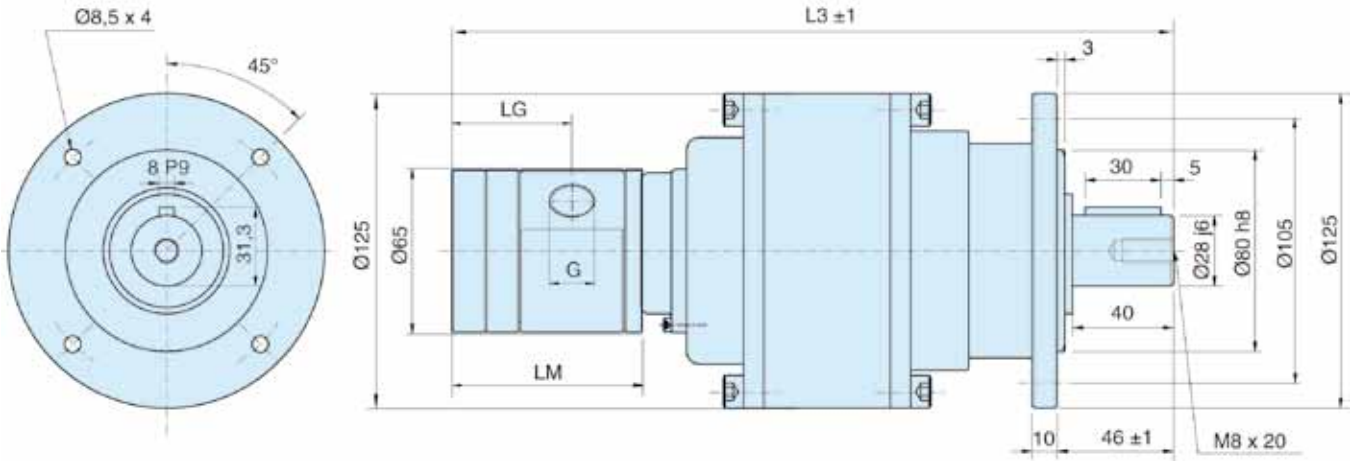

Motor type	G	LG	LM	L1	L2	L3
P1V-M020A	G1/8	39,0	57,5	160,5	197,5	267,5
P1V-M040A	G3/8	49,0	77,5	180,5	217,5	287,5
P1V-M060A	G3/8	56,5	92,0	195,0	232,0	302,0